Theory of turbocompressors

A course of lectures. 3 semester. Group 63238/10

Department Assistant

Sergey Kartashov, Yury Kozhukhov

Saint-Petersburg Polytechnic University, Department of Compressor, Vacuum and Refrigeration Engineering

More about compressor technology on the site of the scientific group www.kviht.com

Sergey Kartashov, Yury Kozhukhov

Theory of turbocompressors. *Lecture 11.*

CONTENT

Gas movement in the turbocompressors channels

- Not viscous flow in between the blades channels of ring and circular bladings.
- The particles equilibrium on the axisymmetric flow surface in the normal direction of the current in the normal direction and in the direction of movement.
- Four kinds of inertia forces acting on the gas particles in a circular blading.
- Velocity and pressure distribution along the normal, Bernoulli equation for the relative motion.
- Transit flow and axial vortex in the centrifugal channels of the impeller, reverse not viscous flow.
- Relative vortex.
- The flow gap evaluation at the outlet of the impeller by the Stodola formula.
- About the flow modeling impossibility in the radial impeller by static expulsion.

Let's consider the motion of an ideal incompressible fluid in a channel of circular blading, a centrifugal impeller rotating at a constant angular velocity.

Let's allocate elementary gas volume in the channel with mass $\boldsymbol{dm = \rho b dn ds}$, where $\boldsymbol{b}$ – is a width of the channel in the direction of the $\boldsymbol{z}$ axis in the meridional plane. We assume $\boldsymbol{c_z = w_z = 0}$. The components of the inertial forces from the portable and relative motion and Coriolis acceleration are shown in the figure.

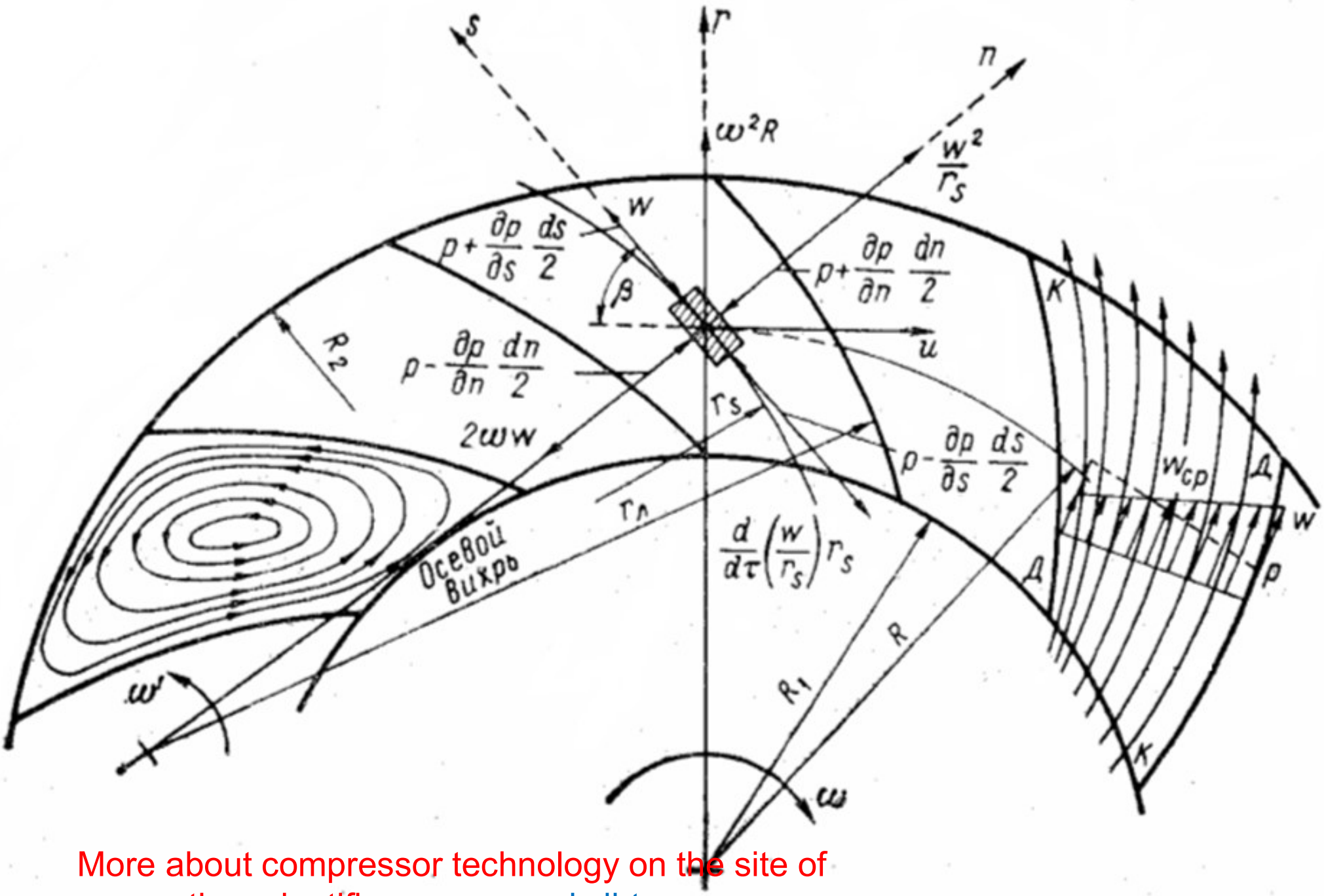

More about compressor technology on the site of the scientific group www.kviht.com

Gas particle equilibrium in between the blades channel of the circular blading of the impeller

In a circular blading four kinds of inertia forces acts on the particle :

1. The inertia force due to the acceleration or deceleration of the flow in the relative motion $\boldsymbol{dw/ds}$.
2. The centrifugal force of the relative motion along a curved path $\boldsymbol{w_2/r_s}$.
3. The centrifugal force of the translational motion $\boldsymbol{u_2/R} = \omega_2\boldsymbol{R}$.
4. The inertia forces of the Coriolis acceleration $\mathbf{2}\omega\boldsymbol{w}$.

Equilibrium equation projection on the n axis when the assumptions are made :

$$-\frac{1}{\rho}\frac{dp}{dn}+\omega^2 R\cos\beta-2\omega w+\frac{w^2}{r_s}=0$$

Equilibrium condition in the s axis:

$$-\frac{1}{\rho}\frac{dp}{ds}+\omega^2 R\sin\beta-\frac{dw}{d\tau}=0$$

Solving the above equations and assuming that:

$$\cos\beta = dR/dn;\ \sin\beta = dR/ds;\ w = ds/d\tau;\ \omega = \text{const},$$

We obtain:

$$dw/dn = 2\omega - w/r_s$$

$r_s>0$, when radius r_s coincides by the direction with the n axis. From here we obtain:

$$w = w_{mid}\,(1 - n/r_s) + 2\omega n$$

w_{mid} – velosity when n=0

More about compressor technology on the site of the scientific group www.kviht.com

From the above equation we obtain that on the back side of the blade (n=a/2) the velocity of the relative motion is:

$$w_b = w_{mid}(1 - 0{,}5a/r_s) + a\omega$$

On the front side: $$w_f = w_{mid}(1 + 0{,}5a/r_s) - a\omega.$$

Rewrite the definition of the velocity as:

$$w = w_{ts} + w_{ов},$$

where $$w_{ts} = w_{mid}(1 - n/r_s);\ w_{av} = 2\omega n$$

w_{ts} component is called the **transit stream** depends on the magnitude of the average velocity w_{mid} (the gas flow rate), the curvature of the channel $1/r_s$ and the position of the point in the channel, which determines the coordinates of n.

If to stop the impeller and pass the same amount of gas through it, the velocity distribution will be determined by the rate w_{ts}.

The second component ***wav***, is called as axial vortex, depends on the position of the point along the channel and from the impeller speed.

The current lines of the axial vortex shown in the figure as conditional, this kind they have for the closed rotating cavity.

Thus, the relative velocity field in the channel of the impeller is a **sum of the speeds of transit flow and axial vortex**. The effect of axial vortex leads to the flow rate is larger in the back side of the blade and is smaller at the front side.

If to conceder the relative velocity formula of the flow, we can see, that under several conditions (low $\mathbf{w_{mid}}$ definitions and high ω) we can obtain the negative values of the $\mathbf{w_f}$ velocity, of in the channel near the front side of the blade the reversed flows can appear. The flow stop near front surface conforms the condition $\mathbf{w_f=o}$.

$$w_{\text{mid}}\,(1 + 0{,}5a/r_s) - a\omega = 0$$

Practically, in most cases, when the flow is viscous such a reverse flow, usually is not observed since firstly the boundary layer separation occurs in which wmid increases. However, for wheels with radially extending blades ($\beta_{bl2} = 90°$) at very low mass flows and large ω such a flow can be observed.

Numerical value of pressure with the losses consideration:

$$dp/\rho + d\left(w^2 - u^2\right)/2 + dh_w = 0$$

Not viscous flow in between the blades channels circular bladings.

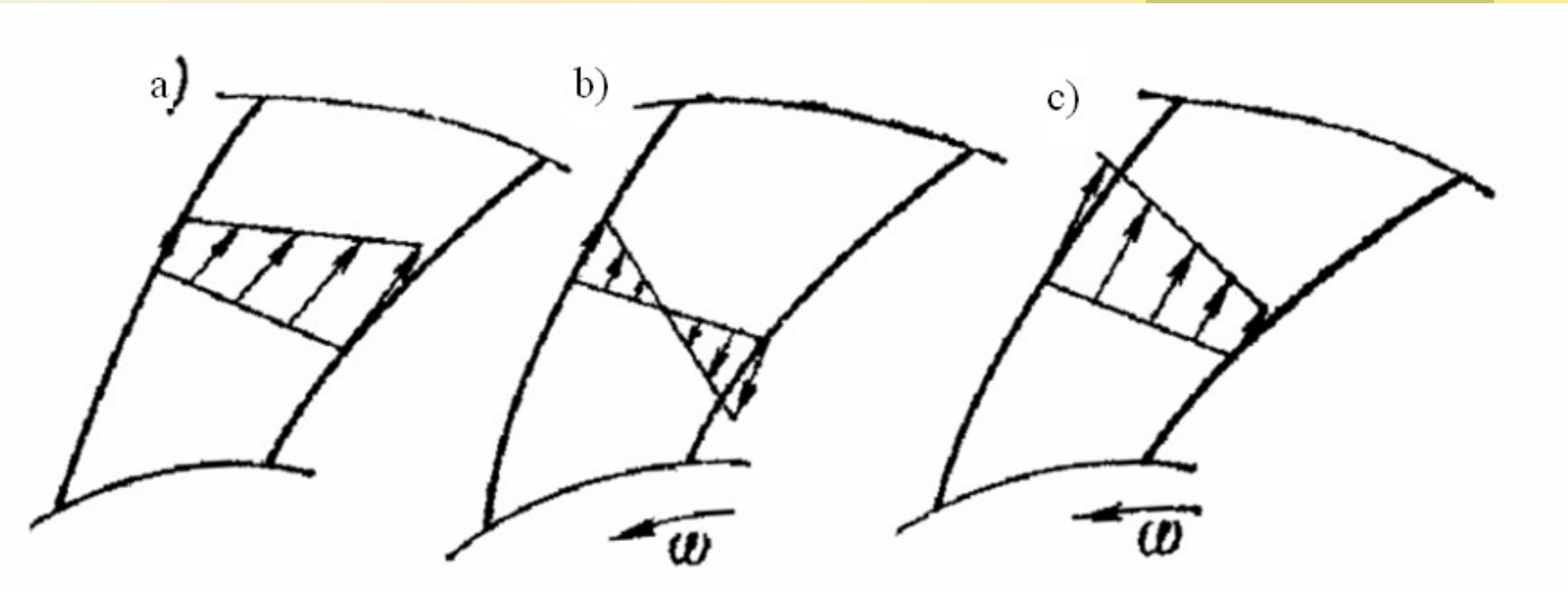

The velocity distribution:

a – transite flow (when: $\bar{m} \neq 0,\ \omega = 0$)

b – axial vortex(when: $\bar{m} = 0,\ \omega \neq 0$)

c – real sum flow (when: $\bar{m} \neq 0,\ \omega \neq 0$)

The nature of the flow lines of **relative vortex** (unlike **axial vortex** is that the relative rotation of the vortex occurs when the blading is not closed at the inlet and outlet, and the axial vortex occurs when the channel is closed on the inlet and outlet) for a circular blading on the following figure is clearly visible

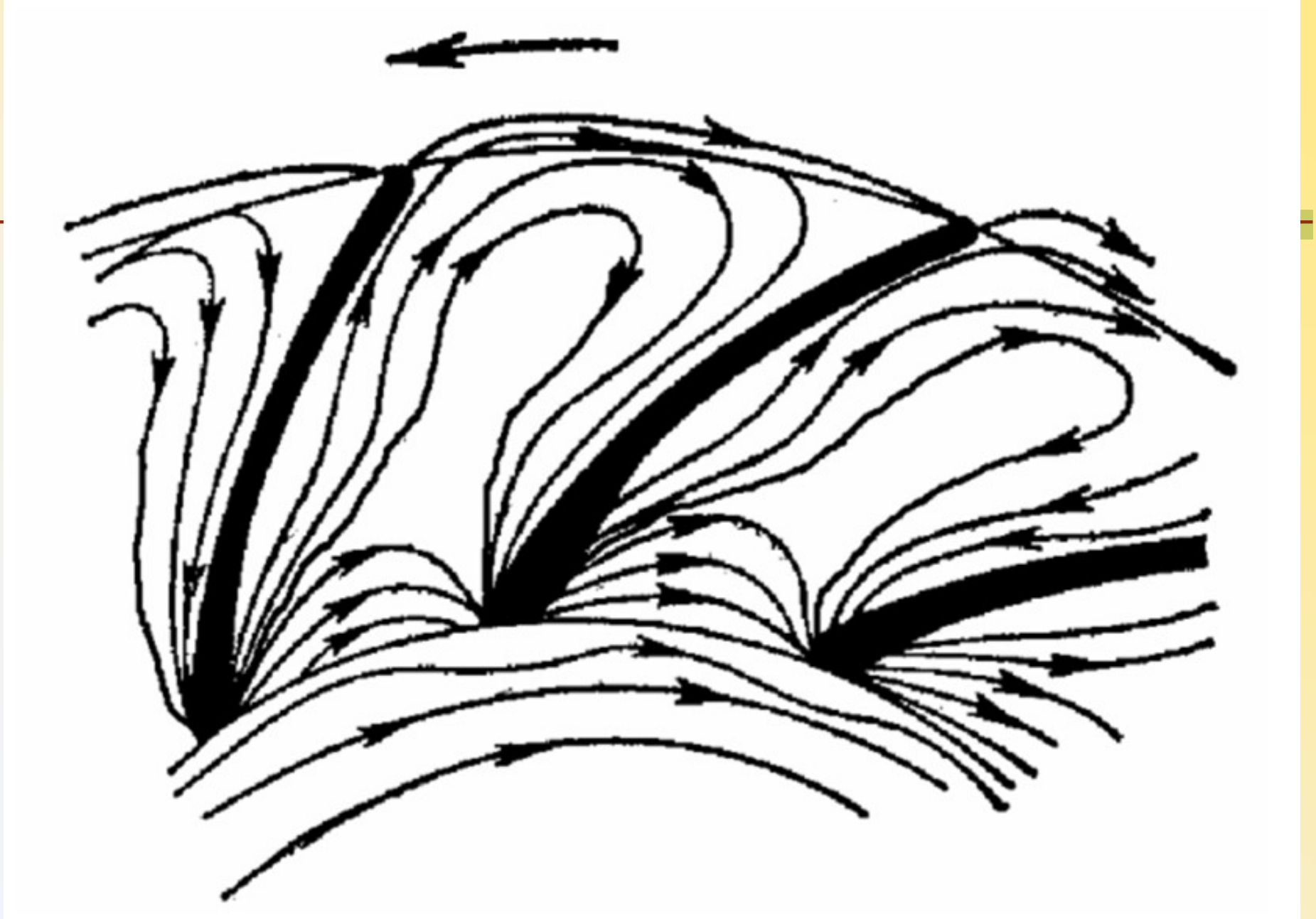

Flow lines in the impeller with zero mass flow (relative vortex)

More about compressor technology on the site of
the scientific group www.kviht.com

The Bernulli's equation is used for the static pressure distribution analyze in the circular channel blading (unviscouse flow):

$$h_T = h_p + h_d,$$

Or in the differential form:

$$d(c_u u) = dp/\rho + dc^2/2.$$

$$dp/\rho = 0{,}5\, d(2c_u u - c^2)$$

Not viscous flow in between the blades channels circular bladings.

Bernullie's equation in relative movement:

$$c^2 = c_r^2 + c_u^2$$

$$c_r = w_r$$

$$c_u + w_u = u$$

$$dp/\rho + dw^2/2 = du^2/2$$

From the Bernoulli equation in relative motion follows that an increase in the static pressure occurs in the centrifugal impeller as opposed to a fixed channel due to reduction of the relative velocity w, and due to increase of the circumferential velocity u when gas flows from the center to the periphery. From Bernoulli's equation in the relative motion in the formula for the velocity follows that the **static pressure in the channel of the impeller is higher on the front side and lower on the back side.**

An important parameter in determining the blading head is the exit angle of the flow in the outlet β_2. The simplest, but at the same time, a rough approximation method for finding the outlet angle for the blades, which are delineated by a circular arc, is developed by **A.Stodola**. He suggested that on the direction of the output speed affects only the geometric angle β_{bl2} on the outlet and axial vortex,

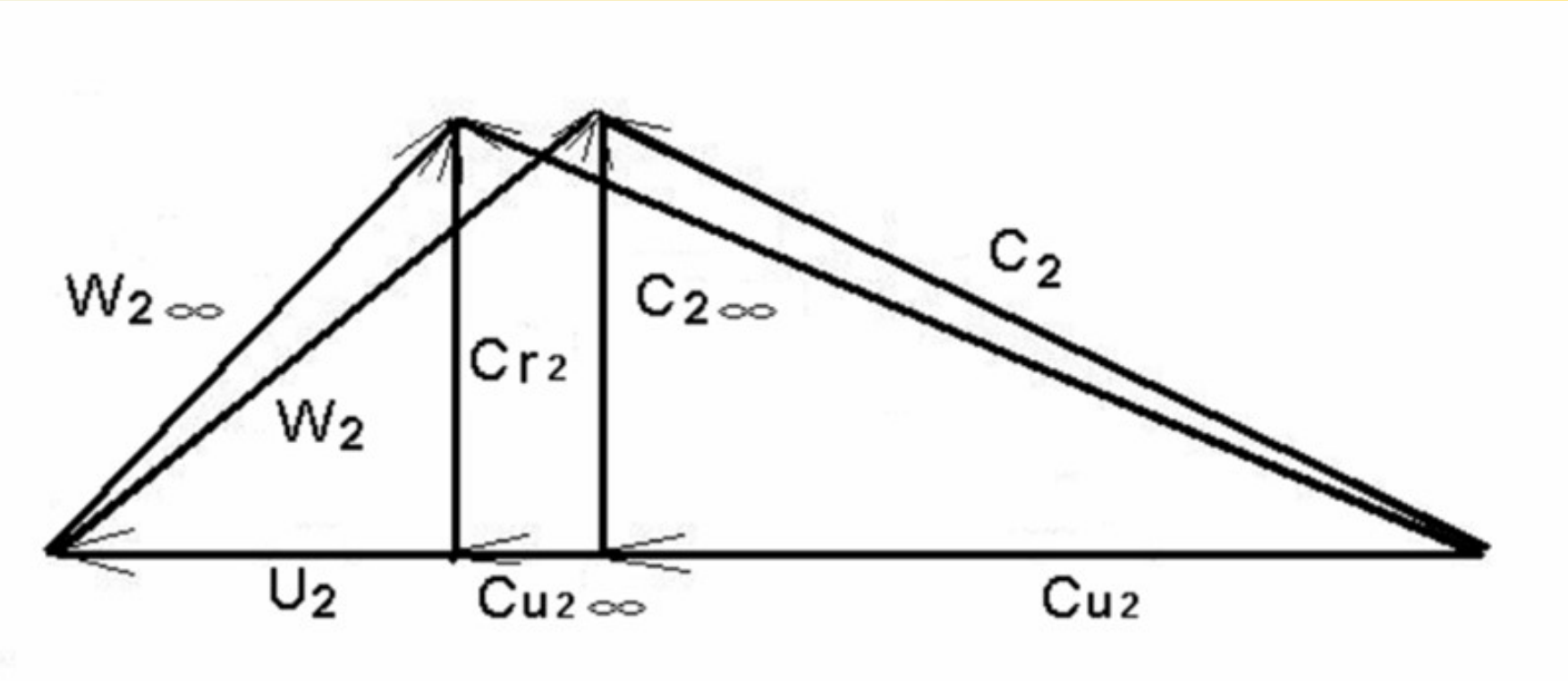

Velocity triangles on the outlet of the centrifugal compressor impeller when limited and unlimited number of blades

When the number of blades is unlimited the theoretical head coefficient is:

$$\psi_{т\infty} = \frac{c_{u2\infty}}{u_2} = 1 - \varphi_2 \mathrm{ctg}\beta_{л2}$$

Theoretical head coefficient of the real impeller with limited number of blades is less by the value: $\Delta c_{u2} = c_{u2\infty} - c_{u2}$:

$$\psi_т = \frac{c_{u2\infty} - \Delta c_{u2}}{u_2} = 1 - \varphi_2 \mathrm{ctg}\beta_{л2} - \Delta \overline{c}_{u2}$$

Not viscous flow in between the blades channels circular bladings.

Stodola formula is widely used in engineering design methods and showed sufficient accuracy in calculation of middle headed and middle consumption impellers of a certain constructions that were used almost exclusively till the middle of the last century.

At the same time in the calculation of other RK formula Stodola gives unacceptably large error. It is necessary to point out the important fact that demonstrates the conditionality of diagram of the flow, which is based on this formula. Namely, the theoretical considerations and measurements show a significant effect of viscosity on the flow rate of the theoretical head coefficient (the more the manifestation of the viscosity is, the greater the flow deviates from the blades direction). Formula Stodola is built entirely on the "inviscouse" flow scheme, ignoring the important effect of the real nature of the flow.

From the analysis of gas flow in a circular bladings implies that unlike axial impellers the experimental study of centrifugal impellers by the static arrays of not moving bladings method is not possible. The main influence on the structure of the flow in a rotating impeller is from the Coriolis force, which is absent in the static purging.

THANK YOU FOR YOUR ATTENTION

More about compressor technology on the site of
the scientific group www.kviht.com